MEETING EXHIBITS

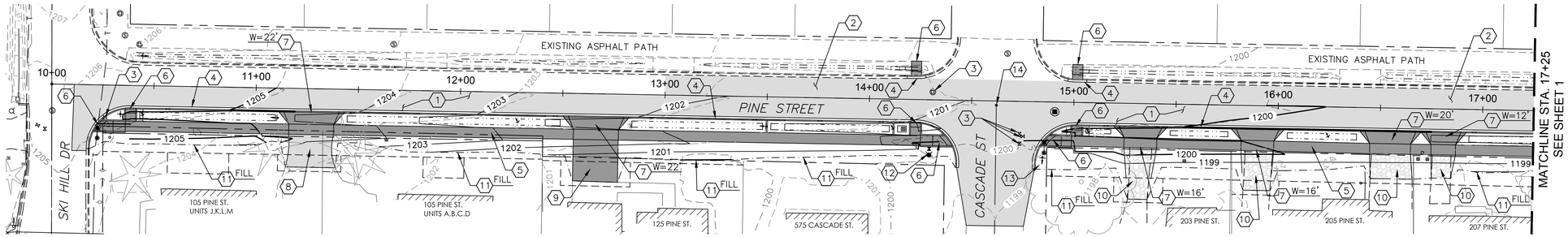

GENERAL NOTES

1. PROPOSED SIGNING AND STRIPING PER SHEETS XX THRU XX.
2. PROPOSED STORM DRAINAGE PER SHEETS XX THRU XX.

CONSTRUCTION NOTES

1. CONSTRUCT HMA ROADWAY PER SECTIONS ON SHEET 5. ASPHALT SHALL BE WSDOT HMA CL. 1/2 IN. PG 64–28.
2. HMA OVERLAY PER SECTIONS ON SHEETS 5 AND 6. ASPHALT SHALL BE WSDOT HMA CL. 1/2 IN. PG 64–28. FINISHED GRADE SHALL BE FLUSH WITH THE LIP OF GUTTER.
3. ADJUST EXISTING STRUCTURES (MONUMENTS, WATER VALVES, SANITARY SEWER MANHOLES, ETC) TO FINISHED GRADE AS REQUIRED OR TO NOTED RIM ELEVATION. WATER VALVE ADJUSTMENTS SHALL BE PER CITY OF LEAVENWORTH DETAIL NO. W3, SEE APPENDIX C.
4. CEMENT CONC. TRAFFIC CURB AND GUTTER PER WSDOT STD PLAN F–10.12–03.
5. CEMENT CONC. SIDEWALK PER WSDOT STD PLAN F–30.10–03. WIDTH = 5 FEET.
6. CEMENT CONC. CURB RAMP TYPE SINGLE DIRECTION 'A' PER WSDOT STANDARD PLAN F–40.16–03.
7. CEMENT CONC. DRIVEWAY ENTRANCE TYPE 3 PER WSDOT STD PLAN F–80.10–04. WIDTH PER PLAN.
8. ASPHALT CONC. DRIVEWAY TRANSITION OF 2" OF HMA CL. 1/2 IN. PG 64–28 ON 4" CSTC.
9. CEMENT CONC. DRIVEWAY TRANSITION OF 4" PORTLAND CEMENT CONCRETE ON 4" CSTC.
10. GRAVEL DRIVEWAY TRANSITION OF 4" CSTC.
11. GRADING DAYLIGHT LINE.
12. PROPOSED LOCATION OF RELOCATED FIRE HYDRANT PER SHEET X.
13. PROPOSED LOCATION OF RELOCATED POWER POLE.
14. MONUMENT CASE, COVER AND PIPE. INSTALL AFTER PAVING IS COMPLETED. SEE SPECIAL PROVISION 8–13 FOR REQUIREMENTS FOR RESETTING MONUMENT.

GRAPHIC SCALE
30 0 15 30 60
(IN FEET)
1 inch = 30 ft.

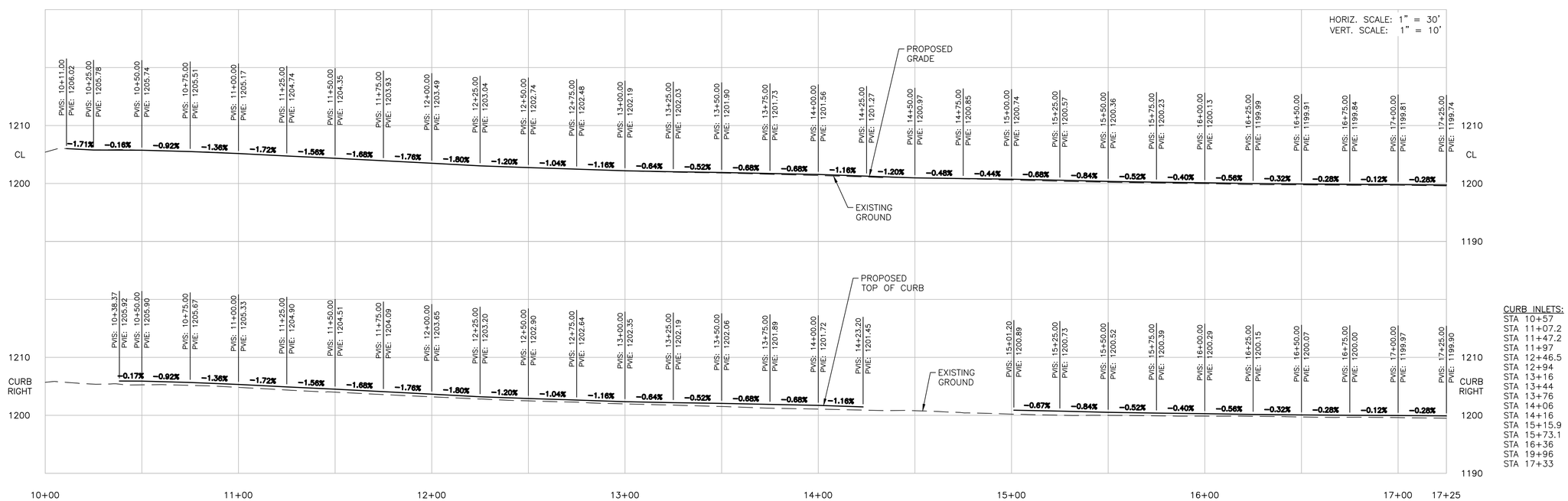

CURB INLETS:
STA 10+57
STA 11+07.2
STA 11+47.2
STA 11+97
STA 12+46.5
STA 12+94
STA 13+16
STA 13+44
STA 13+76
STA 14+06
STA 14+16
STA 15+15.9
STA 15+73.1
STA 16+36
STA 19+96
STA 17+33

REV	DATE	REVISION

TD&H Engineering
509.622.2888 • tdhengineering.com
303 EAST 2ND AVE. • SPOKANE, WASHINGTON 99202

DRAWN BY:	JR/DW
DESIGNED BY:	DNW
QUALITY CHECK:	DNW
DATE:	11/08/18
JOB NO.	S17-123
FIELDBOOK	

PINE STREET PHASE 1 - SKI HILL DR. TO TITUS RD.
LEAVENWORTH, WASHINGTON

PINE STREET PLAN AND PROFILE STA. 10+00 TO STA. 17+25

MEETING EXHIBITS

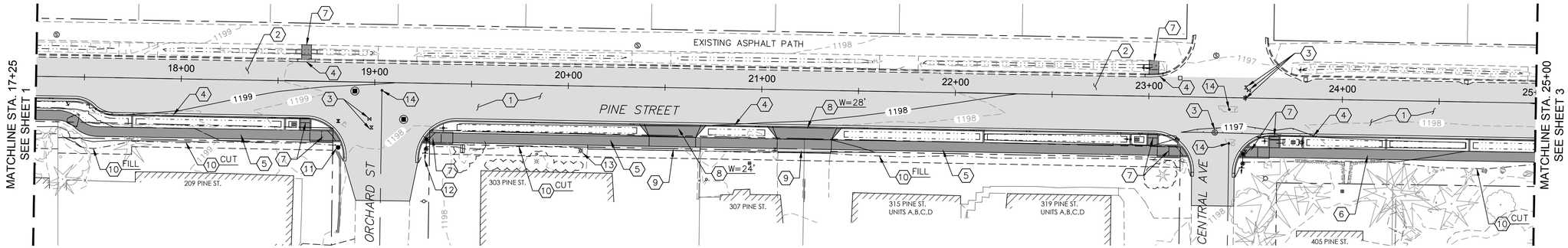

GENERAL NOTES

1. PROPOSED SIGNING AND STRIPING PER SHEETS XX THRU XX.
2. PROPOSED STORM DRAINAGE PER SHEETS XX THRU XX.

CONSTRUCTION NOTES

1. CONSTRUCT HMA ROADWAY PER SECTIONS ON SHEETS 5 AND 6. ASPHALT SHALL BE WSDOT HMA CL. 1/2 IN. PG 64–28.
2. HMA OVERLAY PER SECTIONS ON SHEET 4. ASPHALT SHALL BE WSDOT HMA CL. 1/2 IN. PG 64–28. FINISHED GRADE SHALL BE FLUSH WITH THE LIP OF GUTTER.
3. ADJUST EXISTING STRUCTURES (MONUMENTS, WATER VALVES, SANITARY SEWER MANHOLES, ETC) TO FINISHED GRADE AS REQUIRED OR TO NOTED RIM ELEVATION. WATER VALVE ADJUSTMENTS SHALL BE PER CITY OF LEAVENWORTH DETAIL NO. W3, SEE APPENDIX C.
4. CEMENT CONC. TRAFFIC CURB AND GUTTER PER WSDOT STD PLAN F–10.12–03.
5. CEMENT CONC. SIDEWALK PER WSDOT STD PLAN F–30.10–03. WIDTH = 5 FEET.
6. MONOLITHIC CEMENT CONC. CURB AND SIDEWALK PER WSDOT STD PLAN F–30.10–03. WIDTH = 5 FEET.
7. CEMENT CONC. CURB RAMP TYPE SINGLE DIRECTION 'A' PER WSDOT STANDARD PLAN F–40.16–03.
8. CEMENT CONC. DRIVEWAY ENTRANCE TYPE 3 PER WSDOT STD PLAN F–80.10–04. WIDTH PER PLAN.
9. ASPHALT CONC. DRIVEWAY TRANSITION OF 2" OF HMA CL. 1/2 IN. PG 64–28 ON 4" CSTC.
10. GRADING DAYLIGHT LINE.
11. PROPOSED LOCATION OF RELOCATED FIRE HYDRANT PER SHEET X.
12. PROPOSED LOCATION OF RELOCATED POWER POLE.
13. PROPOSED LOCATION OF RELOCATED YARD LIGHT.
14. MONUMENT CASE, COVER AND PIPE. INSTALL AFTER PAVING IS COMPLETED. SEE SPECIAL PROVISION 8–13 FOR REQUIREMENTS FOR RESETTING MONUMENT.

GRAPHIC SCALE
30 0 15 30 60
(IN FEET)
1 inch = 30 ft.

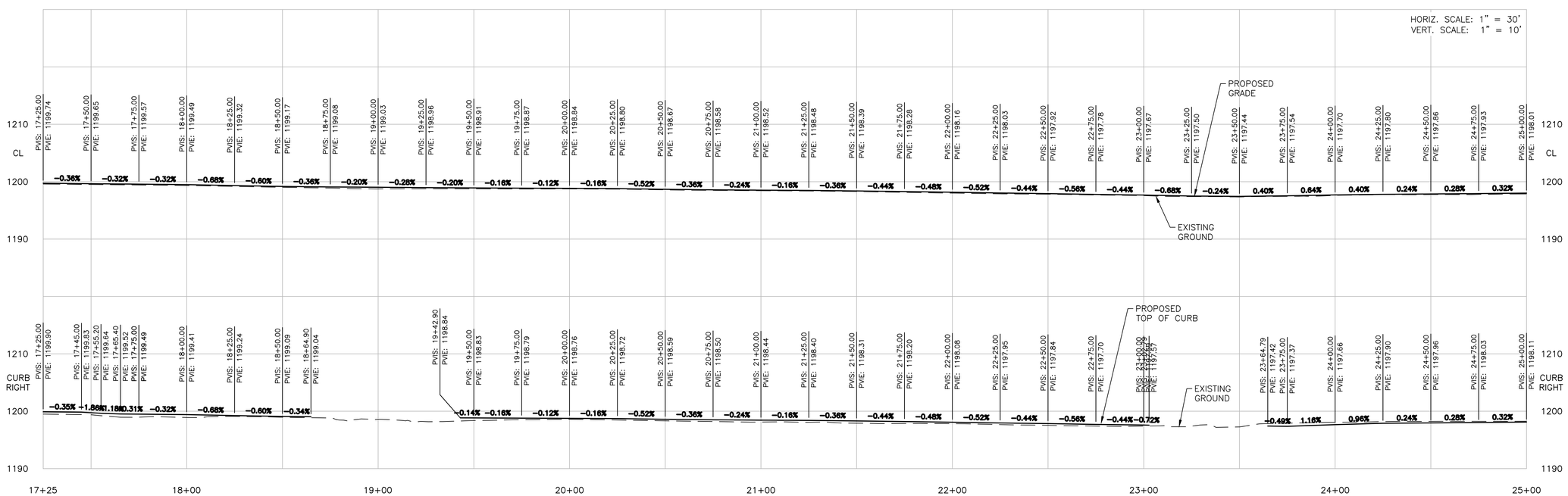

CURB INLETS:
STA 17+69
STA 18+08
STA 18+48
STA 18+58
STA 19+82
STA 20+33.3
STA 20+98
STA 21+54
STA 22+09
STA 22+38
STA 22+85
STA 22+96
STA 23+75
STA 23+86
STA 24+29
STA 24+72

REV	DATE	REVISION

TD&H Engineering
509.622.2888 • tdhengineering.com
303 EAST 2ND AVE. • SPOKANE, WASHINGTON 99202

DRAWN BY:	JR/DW
DESIGNED BY:	DNW
QUALITY CHECK:	DNW
DATE:	11/08/18
JOB NO.	S17-123
FIELDBOOK	

PINE STREET PHASE 1 - SKI HILL DR. TO TITUS RD.
LEAVENWORTH, WASHINGTON

PINE STREET PLAN AND PROFILE STA. 17+25 TO STA. 25+00

MEETING EXHIBITS

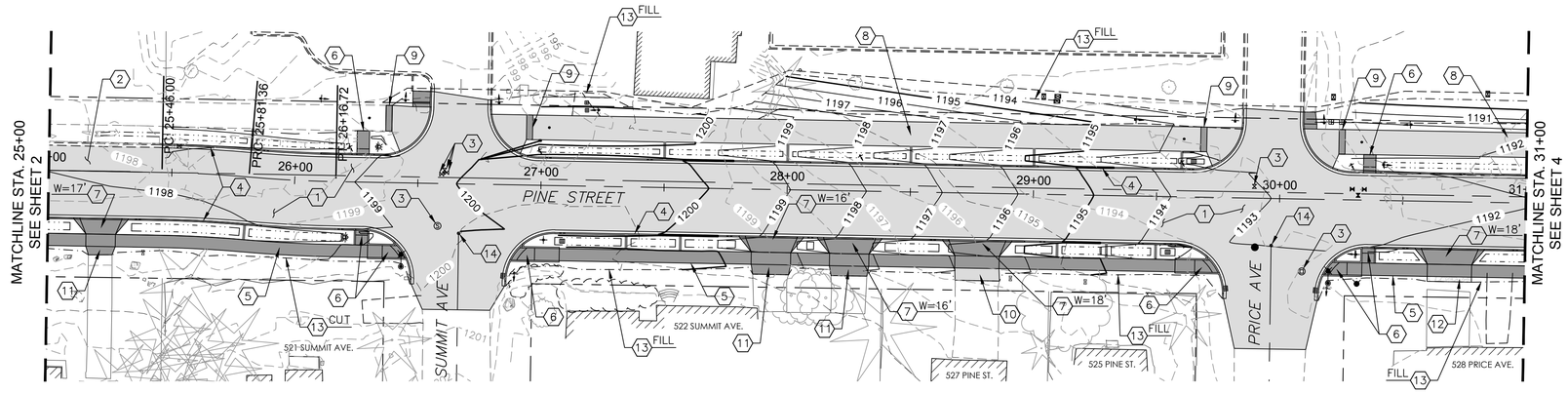

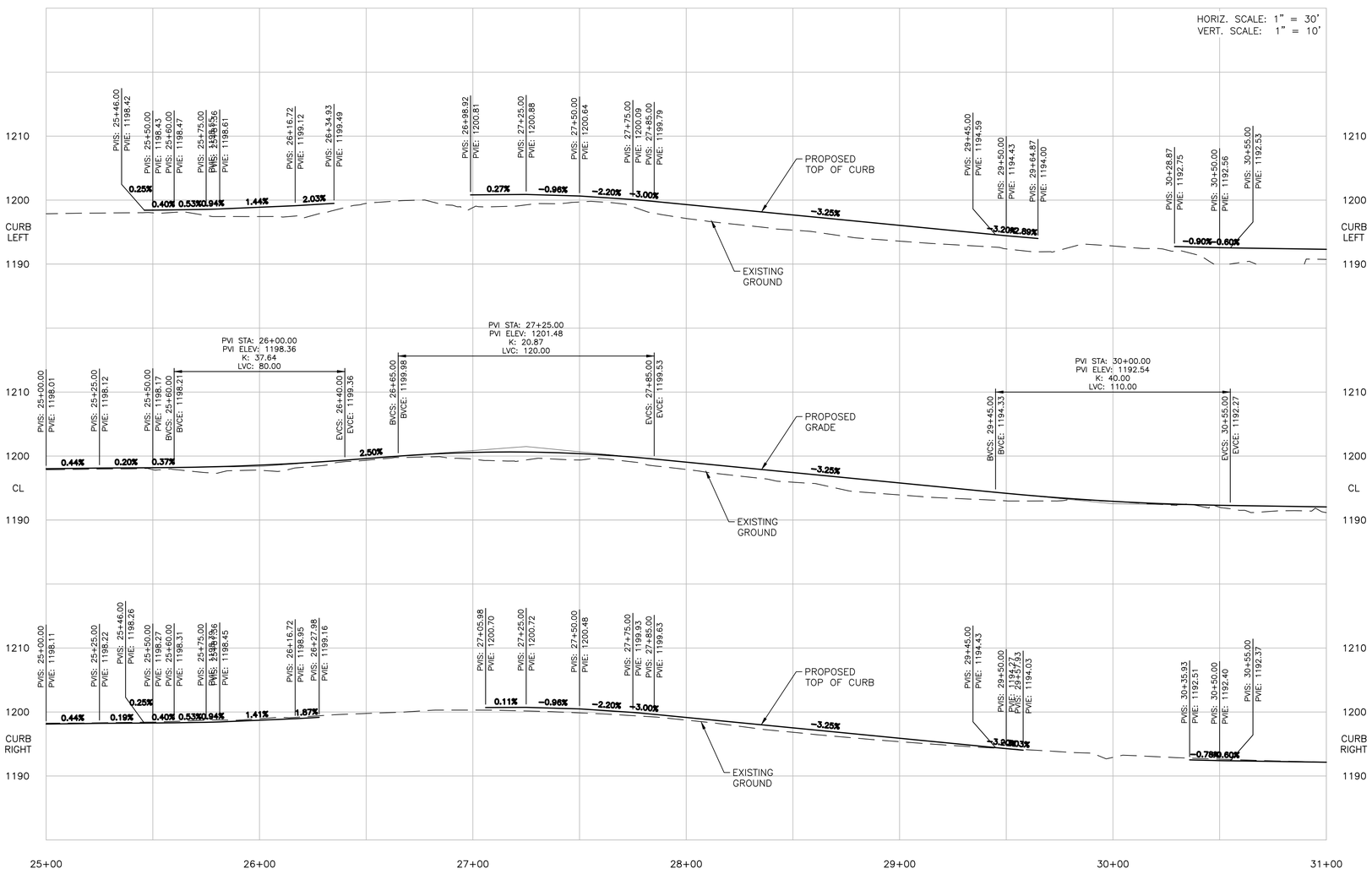

CURB INLETS:
STA 25+87.5
STA 27+02.9
STA 27+44
STA 27+69
STA 27+94
STA 28+19
STA 28+44
STA 28+69
STA 28+94
STA 29+24
STA 29+54
STA 29+63.9
STA 30+74

CURB INLETS:
STA 25+36.6
STA 25+87
STA 26+19
STA 27+09
STA 27+51
STA 27+76.9
STA 28+09.8
STA 28+59.6
STA 29+04
STA 29+24
STA 29+44
STA 29+55
STA 30+51.5
STA 30+96

GENERAL NOTES

1. PROPOSED SIGNING AND STRIPING PER SHEETS XX THRU XX.
2. PROPOSED STORM DRAINAGE PER SHEETS XX THRU XX.

CONSTRUCTION NOTES

1. CONSTRUCT HMA ROADWAY PER SECTIONS ON SHEETS 6 AND 7. ASPHALT SHALL BE WSDOT HMA CL. 1/2 IN. PG 64–28.
2. HMA OVERLAY PER SECTIONS ON SHEET 4. ASPHALT SHALL BE WSDOT HMA CL. 1/2 IN. PG 64–28. FINISHED GRADE SHALL BE FLUSH WITH THE LIP OF GUTTER.
3. ADJUST EXISTING STRUCTURES (MONUMENTS, WATER VALVES, SANITARY SEWER MANHOLES, ETC) TO FINISHED GRADE AS REQUIRED OR TO NOTED RIM ELEVATION. WATER VALVE ADJUSTMENTS SHALL BE PER CITY OF LEAVENWORTH DETAIL NO. W3, SEE APPENDIX C.
4. CEMENT CONC. TRAFFIC CURB AND GUTTER PER WSDOT STD PLAN F–10.12–03.
5. MONOLITHIC CEMENT CONC. CURB AND SIDEWALK PER WSDOT STD PLAN F–30.10–03. WIDTH = 5 FEET.
6. CEMENT CONC. CURB RAMP TYPE SINGLE DIRECTION 'A' PER WSDOT STANDARD PLAN F–40.16–03.
7. CEMENT CONC. DRIVEWAY ENTRANCE TYPE 3 PER WSDOT STD PLAN F–80.10–04. WIDTH PER PLAN.
8. 10 FOOT WIDE ASPHALT PATH. ASPHALT SHALL BE WSDOT HMA CL. 1/2 IN. PG 64–28.
9. DETECTABLE WARNING SURFACE PER DETAIL X ON SHEET X.
10. ASPHALT CONC. DRIVEWAY TRANSITION OF 2" OF HMA CL. 1/2 IN. PG 64–28 ON 4" CSTC.
11. CEMENT CONC. DRIVEWAY TRANSITION OF 4" PORTLAND CEMENT CONCRETE ON 4" CSTC.
12. GRAVEL DRIVEWAY TRANSITION OF 4" CSTC.
13. GRADING DAYLIGHT LINE.
14. MONUMENT CASE, COVER AND PIPE. INSTALL AFTER PAVING IS COMPLETED. SEE SPECIAL PROVISION 8–13 FOR REQUIREMENTS FOR RESETTING MONUMENT.

GRAPHIC SCALE
30 0 15 30 60
(IN FEET)
1 inch = 30 ft.

REV	DATE	REVISION

TD&H Engineering
509.622.2888 • tdhengineering.com
303 EAST 2ND AVE. • SPOKANE, WASHINGTON 99202

DRAWN BY:	JR/DW
DESIGNED BY:	DNW
QUALITY CHECK:	DNW
DATE:	11/08/18
JOB NO.	S17-123
FIELDBOOK	

PINE STREET PHASE 1 - SKI HILL DR. TO TITUS RD.
LEAVENWORTH, WASHINGTON

PINE STREET PLAN AND PROFILE STA. 25+00 TO STA. 31+00

MEETING EXHIBITS

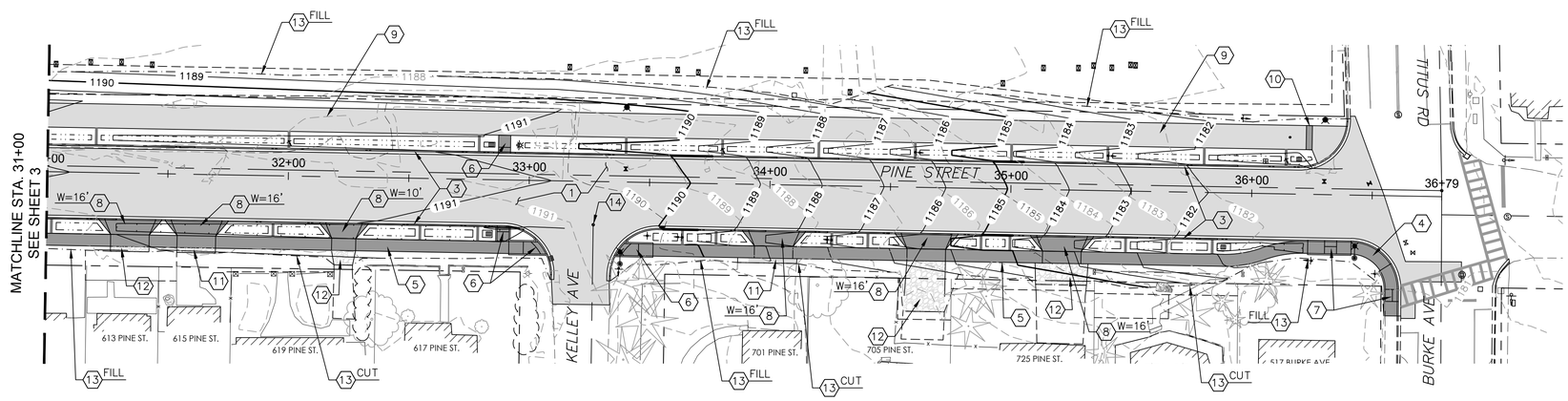

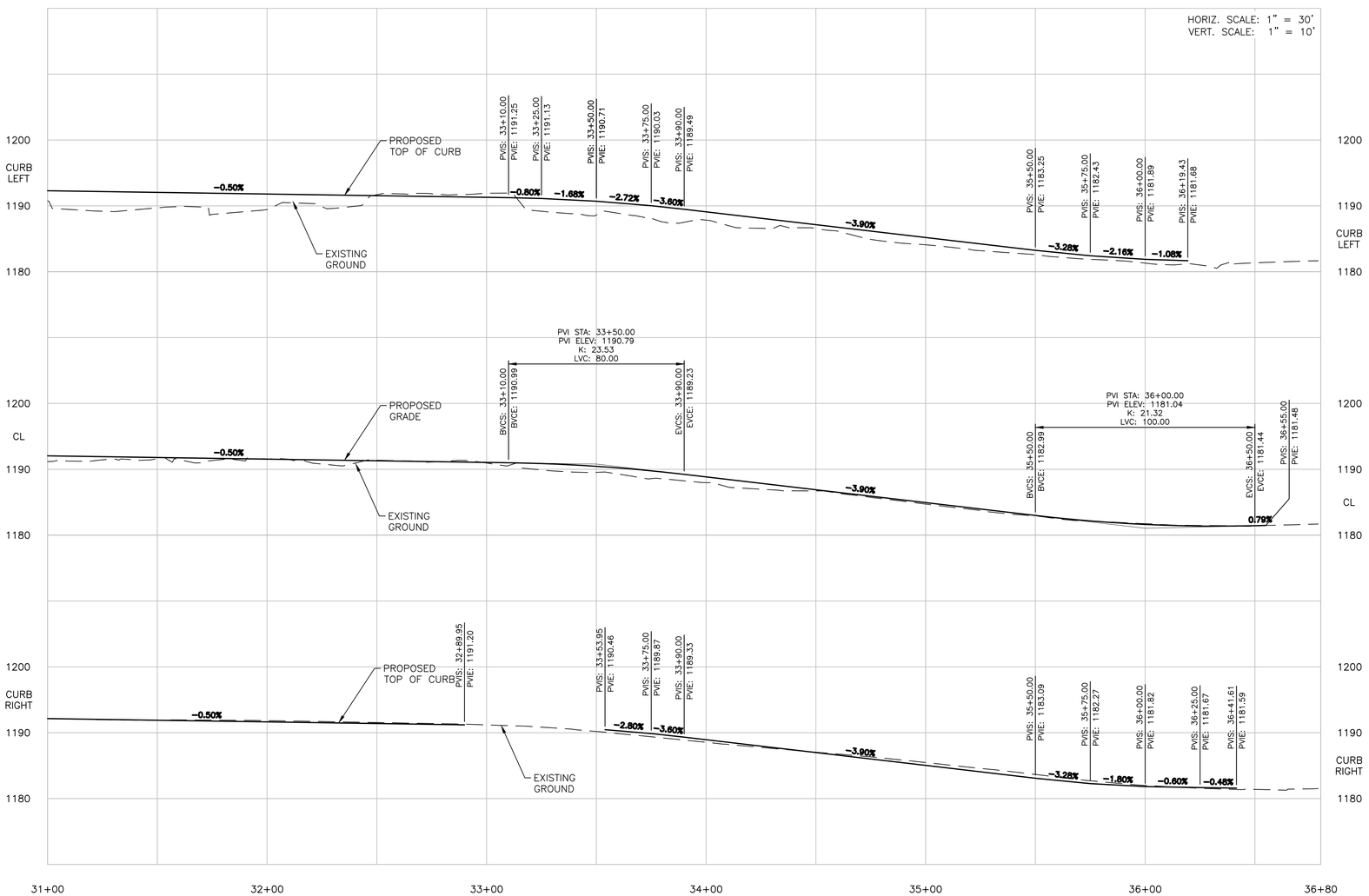

CURB INLETS:
STA 31+14
STA 31+54
STA 31+94
STA 32+33
STA 32+73
STA 32+82
STA 33+34
STA 33+74
STA 34+14
STA 34+54
STA 34+94
STA 35+34
STA 35+74
STA 36+08
STA 36+18.4

CURB INLETS:
STA 31+17.7
STA 31+88
STA 32+09.5
STA 32+49
STA 32+73
STA 32+83
STA 33+58
STA 33+72
STA 33+85
STA 34+20
STA 34+35
STA 34+48.3
STA 34+82
STA 34+94
STA 35+04.6
STA 35+42
STA 35+59
STA 35+78
STA 35+89

GENERAL NOTES

1. PROPOSED SIGNING AND STRIPING PER SHEETS XX THRU XX.
2. PROPOSED STORM DRAINAGE PER SHEETS XX THRU XX.

CONSTRUCTION NOTES

1. CONSTRUCT HMA ROADWAY PER SECTION ON SHEET 7. ASPHALT SHALL BE WSDOT HMA CL. 1/2 IN. PG 64-28.
2. ADJUST EXISTING STRUCTURES (MONUMENTS, WATER VALVES, SANITARY SEWER MANHOLES, ETC) TO FINISHED GRADE AS REQUIRED OR TO NOTED RIM ELEVATION. WATER VALVE ADJUSTMENTS SHALL BE PER CITY OF LEAVENWORTH DETAIL NO. W3, SEE APPENDIX C.
3. CEMENT CONC. TRAFFIC CURB AND GUTTER PER WSDOT STD PLAN F-10.12-03.
4. CEMENT CONC. SIDEWALK PER WSDOT STD PLAN F-30.10-03. WIDTH = 5 FEET.
5. MONOLITHIC CEMENT CONC. CURB AND SIDEWALK PER WSDOT STD PLAN F-30.10-03. WIDTH = 5 FEET.
6. CEMENT CONC. CURB RAMP TYPE SINGLE DIRECTION 'A' PER WSDOT STANDARD PLAN F-40.16-03.
7. CEMENT CONC. CURB RAMP TYPE PARALLEL 'A' PER WSDOT STANDARD PLAN F-40.12-03.
8. CEMENT CONC. DRIVEWAY ENTRANCE TYPE 3 PER WSDOT STD PLAN F-80.10-04. WIDTH PER PLAN.
9. 10 FOOT WIDE ASPHALT PATH. ASPHALT SHALL BE WSDOT HMA CL. 1/2 IN. PG 64-28.
10. DETECTABLE WARNING SURFACE PER DETAIL X ON SHEET X.
11. ASPHALT CONC. DRIVEWAY TRANSITION OF 2" OF HMA CL. 1/2 IN. PG 64-28 ON 4" CSTC.
12. GRAVEL DRIVEWAY TRANSITION OF 4" CSTC.
13. GRADING DAYLIGHT LINE.
14. MONUMENT CASE, COVER AND PIPE. INSTALL AFTER PAVING IS COMPLETED. SEE SPECIAL PROVISION 8-13 FOR REQUIREMENTS FOR RESETTING MONUMENT.

GRAPHIC SCALE
30 0 15 30 60
(IN FEET)
1 inch = 30 ft.

REV	DATE	REVISION

TD&H Engineering
509.622.2888 • tdhengineering.com
303 EAST 2ND AVE. • SPOKANE, WASHINGTON 99202

DRAWN BY:	JR/DW
DESIGNED BY:	DNW
QUALITY CHECK:	DNW
DATE:	11/08/18
JOB NO.	S17-123
FIELDBOOK	

PINE STREET PHASE 1 - SKI HILL DR. TO TITUS RD.
LEAVENWORTH, WASHINGTON

PINE STREET PLAN AND PROFILE STA. 31+00 TO STA. 36+79

MEETING EXHIBITS

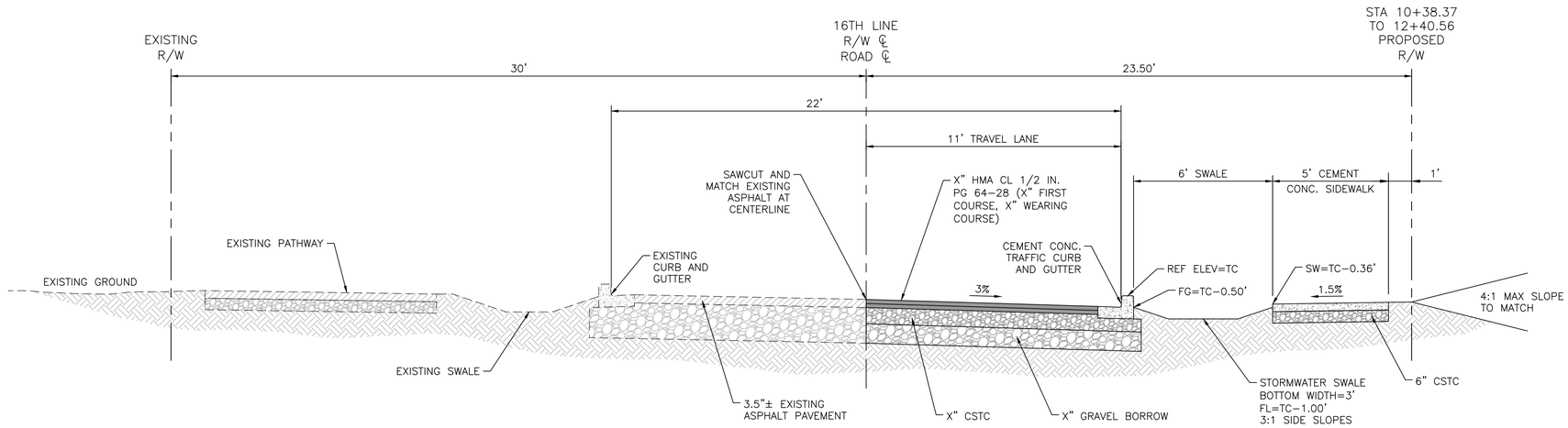

TYPICAL ROAD SECTION - STA 10+38.37 TO 13+00.00

NOT TO SCALE

1

OVERLAY THICKNESS AT CENTERLINE	
STATION OR RANGE	THICKNESS
13+25	0.08'
13+50	0.10'
13+75	0.15'
14+00	0.20'
14+25	0.15'

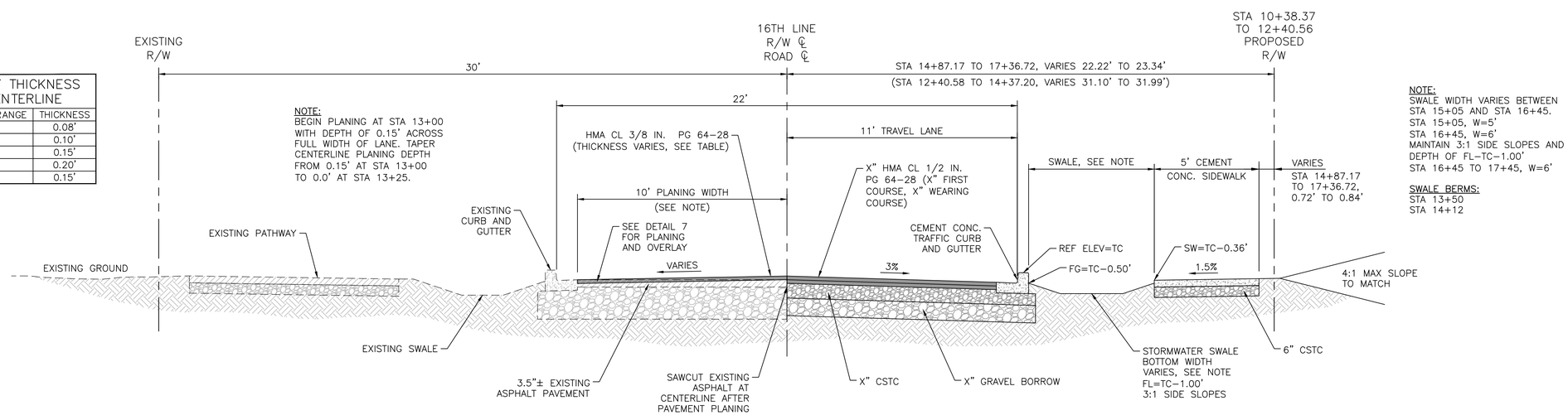

NOTE:
SWALE WIDTH VARIES BETWEEN STA 15+05 AND STA 16+45.
STA 15+05, W=5'
STA 16+45, W=6'
MAINTAIN 3:1 SIDE SLOPES AND DEPTH OF FL-TC-1.00'
STA 16+45 TO 17+45, W=6'

SWALE BERMS:
STA 13+50
STA 14+12

TYPICAL ROAD SECTION - STA 13+00.00 TO 17+45.00

NOT TO SCALE

2

REV	DATE	REVISION

TD&H Engineering
509.622.2888 • tdhengineering.com
303 EAST 2ND AVE. • SPOKANE, WASHINGTON 99202

DRAWN BY:	JR/DW
DESIGNED BY:	DNW
QUALITY CHECK:	DNW
DATE:	11/08/18
JOB NO.	S17-123
FIELDBOOK	

PINE STREET PHASE 1 - SKI HILL DR. TO TITUS RD.
LEAVENWORTH, WASHINGTON

TYPICAL ROAD SECTIONS

MEETING EXHIBITS

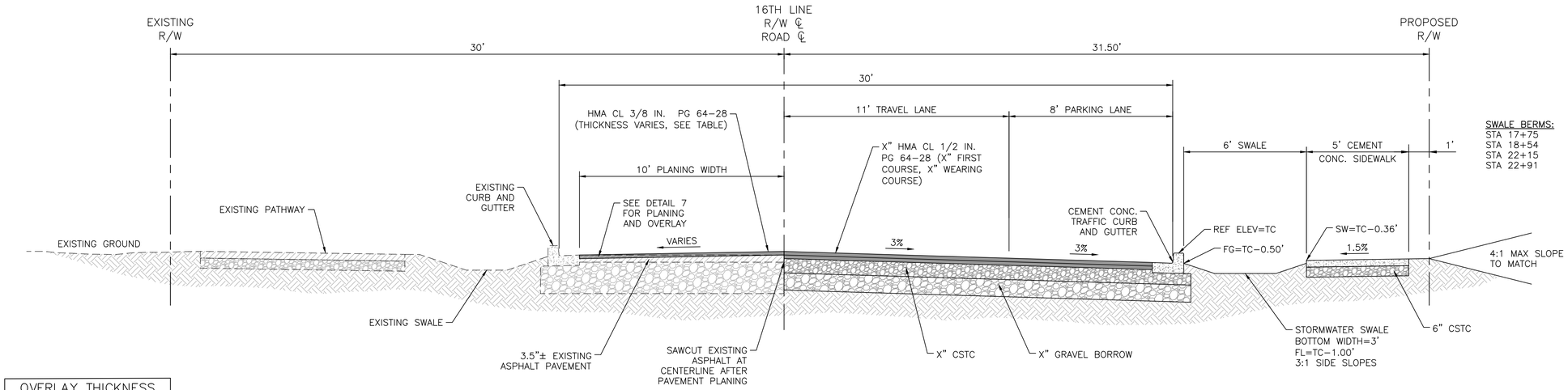

OVERLAY THICKNESS AT CENTERLINE	
STATION OR RANGE	THICKNESS
14+25	0.15
14+50	0.10'
14+75 TO 15+00	0.15'
15+25	0.20'
15+50 TO 16+00	0.15'
16+25	0.20'
16+50 TO 16+75	0.15'
17+00	0.10'
17+25 TO 18+50	0.15'
18+75	0.20'
19+00	0.30'
19+25	0.20'
19+50 TO 19+75	0.15'
20+00 TO 21+50	0.10'
21+75 TO 22+25	0.15'
22+50 TO 24+50	0.10'
24+75 TO 25+46	0.15'

TYPICAL ROAD SECTION - STA 17+65.40 TO 23+02.79

NOT TO SCALE

3

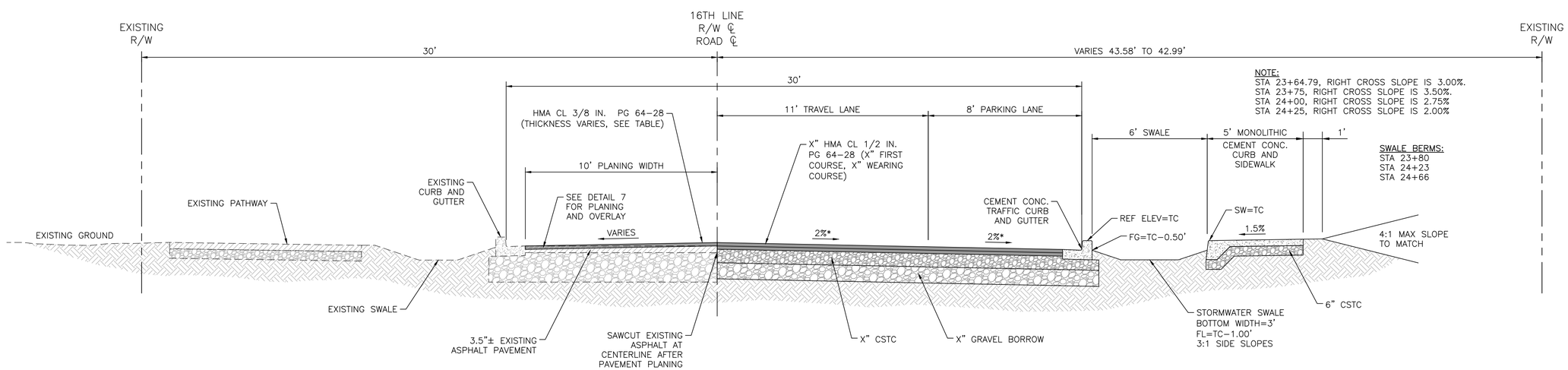

TYPICAL ROAD SECTION - STA 23+64.79 TO 25+46.00

NOT TO SCALE

4

REV	DATE	REVISION

TD&H Engineering
509.622.2888 • tdhengineering.com
303 EAST 2ND AVE. • SPOKANE, WASHINGTON 99202

DRAWN BY:	JR/DW
DESIGNED BY:	DNW
QUALITY CHECK:	DNW
DATE:	11/08/18
JOB NO.	S17-123
FIELDBOOK	

PINE STREET PHASE 1 - SKI HILL DR. TO TITUS RD.
LEAVENWORTH, WASHINGTON

TYPICAL ROAD SECTIONS

MEETING EXHIBITS

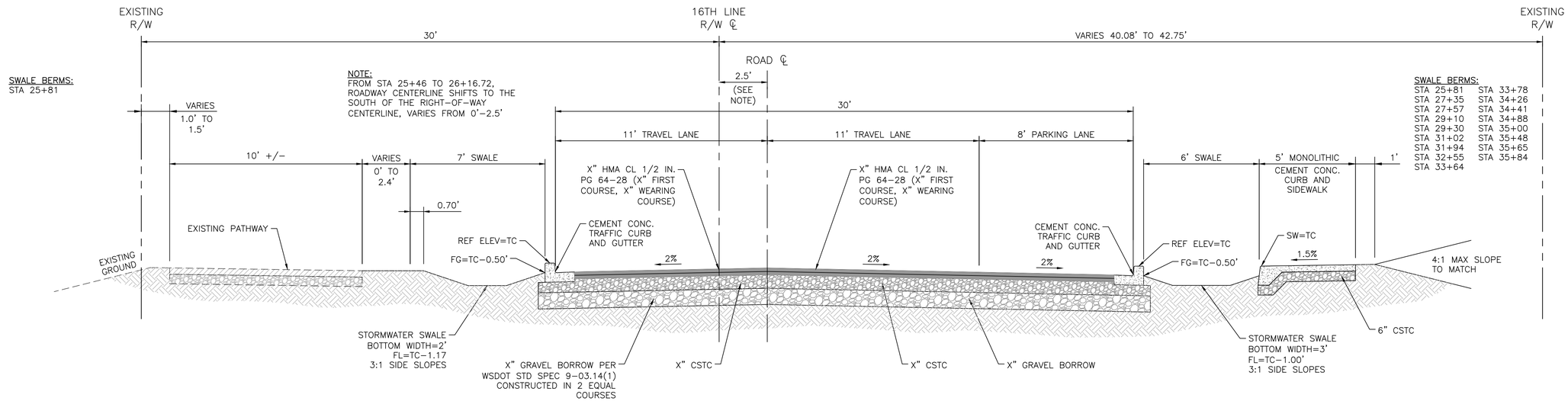

TYPICAL ROAD SECTION - STA 25+46.00 TO 26+66.92

NOT TO SCALE

5

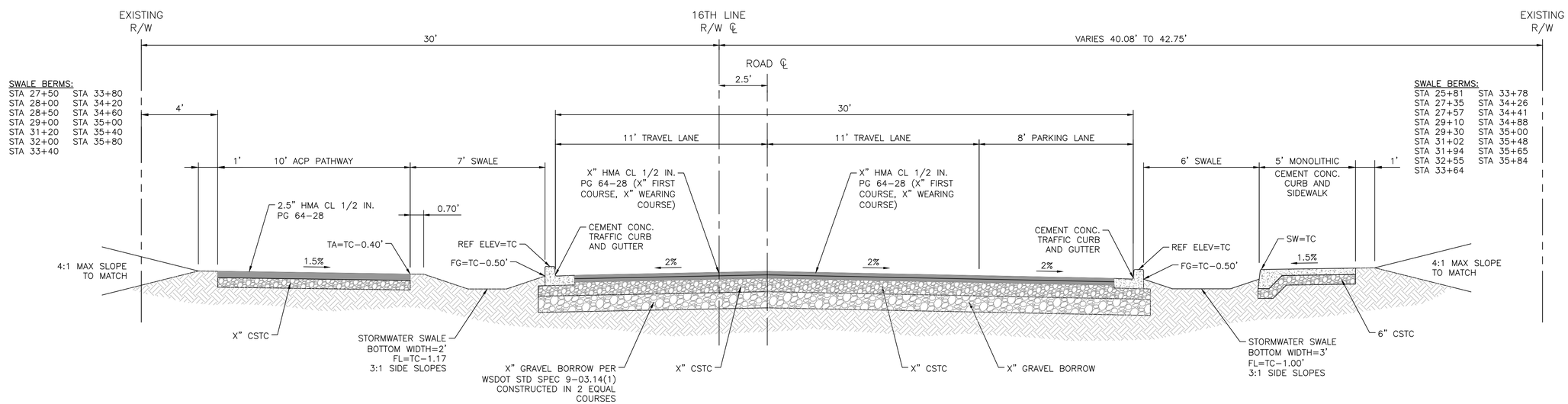

TYPICAL ROAD SECTION - STA 26+66.92 TO 36+19.43

NOT TO SCALE

6

REV	DATE	REVISION

TD&H Engineering
509.622.2888 • tdhengineering.com
303 EAST 2ND AVE. • SPOKANE, WASHINGTON 99202

DRAWN BY:	JR/DW
DESIGNED BY:	DNW
QUALITY CHECK:	DNW
DATE:	11/08/18
JOB NO.	S17-123
FIELDBOOK	

PINE STREET PHASE 1 - SKI HILL DR. TO TITUS RD.
LEAVENWORTH, WASHINGTON

TYPICAL ROAD SECTIONS

MEETING EXHIBITS

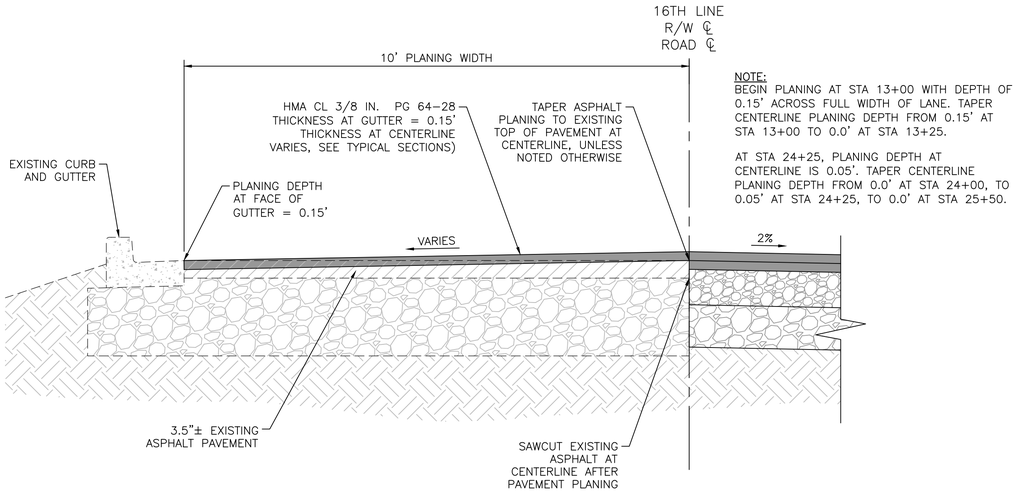

NOTE:
BEGIN PLANING AT STA 13+00 WITH DEPTH OF 0.15' ACROSS FULL WIDTH OF LANE. TAPER CENTERLINE PLANING DEPTH FROM 0.15' AT STA 13+00 TO 0.0' AT STA 13+25.

AT STA 24+25, PLANING DEPTH AT CENTERLINE IS 0.05'. TAPER CENTERLINE PLANING DEPTH FROM 0.0' AT STA 24+00, TO 0.05' AT STA 24+25, TO 0.0' AT STA 25+50.

PAVEMENT PLANING DETAIL AT CURB

NOT TO SCALE

7

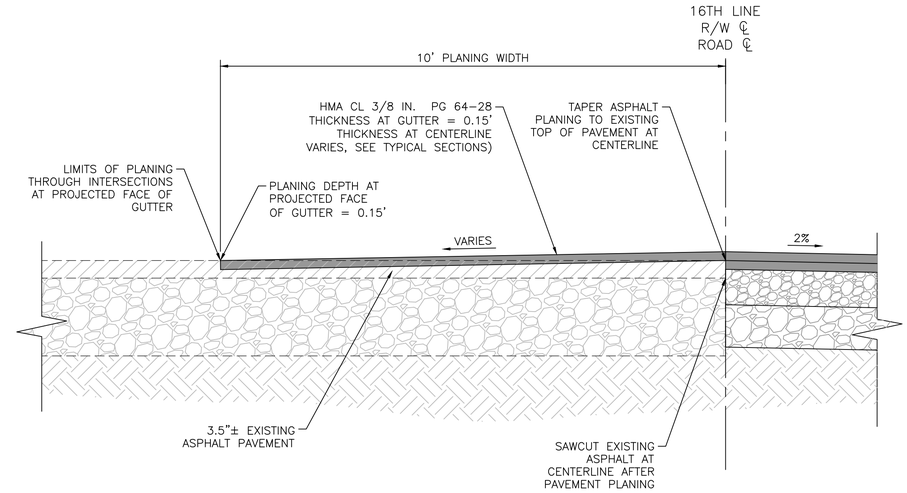

PAVEMENT PLANING DETAIL AT INTERSECTION

NOT TO SCALE

8

REV	DATE	REVISION

TD&H Engineering
509.622.2888 • tdhengineering.com
303 EAST 2ND AVE. • SPOKANE, WASHINGTON 99202

DRAWN BY:	JR/DW
DESIGNED BY:	DNW
QUALITY CHECK:	DNW
DATE:	11/08/18
JOB NO.	S17-123
FIELDBOOK	

PINE STREET PHASE 1 - SKI HILL DR. TO TITUS RD.
LEAVENWORTH, WASHINGTON

TYPICAL ROAD SECTIONS

MEETING EXHIBITS

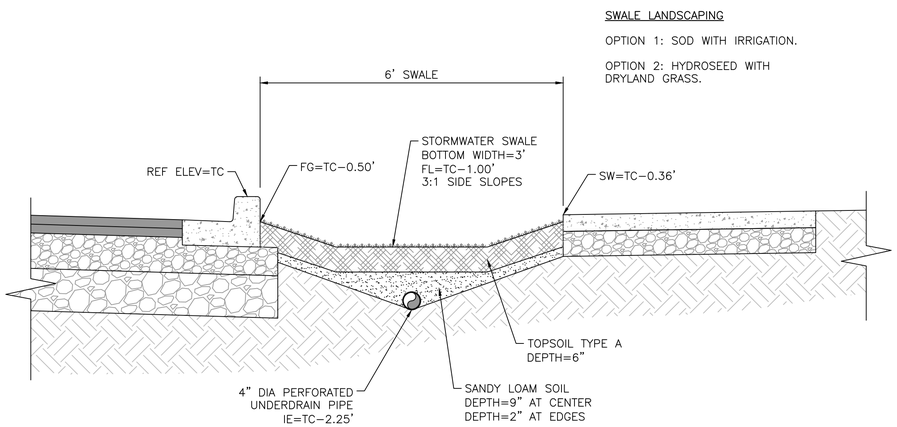

TYPICAL SOUTH SWALE SECTION
STA 10+38.37 RT TO 23+02.79 RT
NOT TO SCALE
9

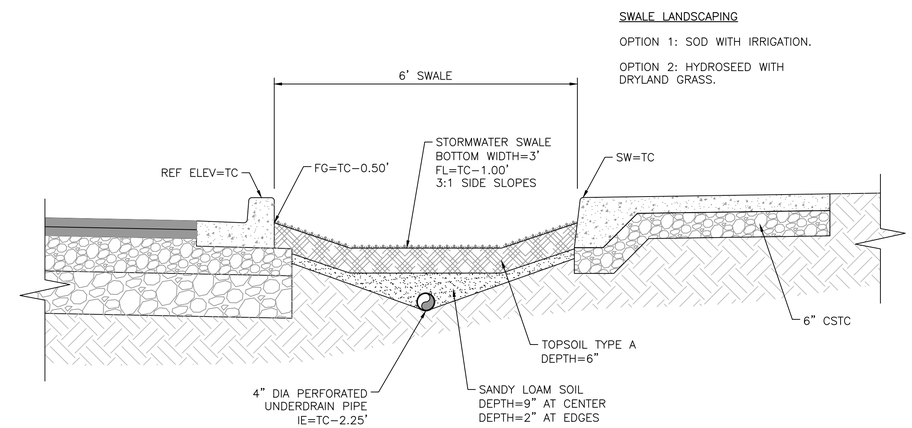

TYPICAL SOUTH SWALE SECTION
STA 23+64.79 RT TO 36+19.43 RT
NOT TO SCALE
10

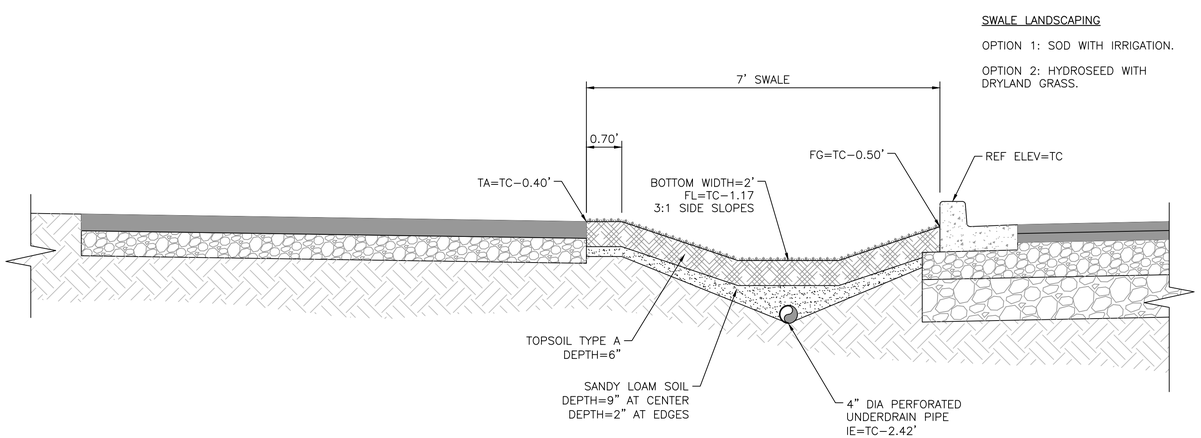

TYPICAL NORTH SWALE SECTION - STA 25+46.00 LT TO 36+19.43 LT
NOT TO SCALE
11

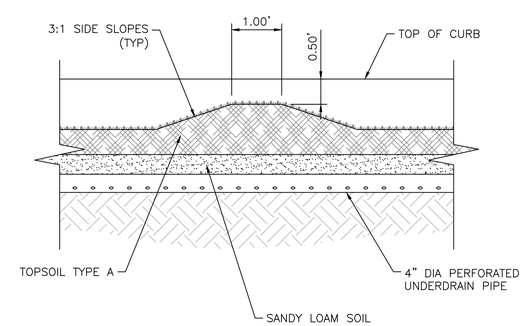

TYPICAL SWALE BERM SECTION
NOT TO SCALE
12

REV	DATE	REVISION

TD&H Engineering
509.622.2888 • tdhengineering.com
303 EAST 2ND AVE. • SPOKANE, WASHINGTON 99202

DRAWN BY:	JR/DW
DESIGNED BY:	DNW
QUALITY CHECK:	DNW
DATE:	11/08/18
JOB NO.	S17-123
FIELDBOOK	

PINE STREET PHASE 1 - SKI HILL DR. TO TITUS RD.
LEAVENWORTH, WASHINGTON

TYPICAL SWALE SECTIONS

MEETING EXHIBITS

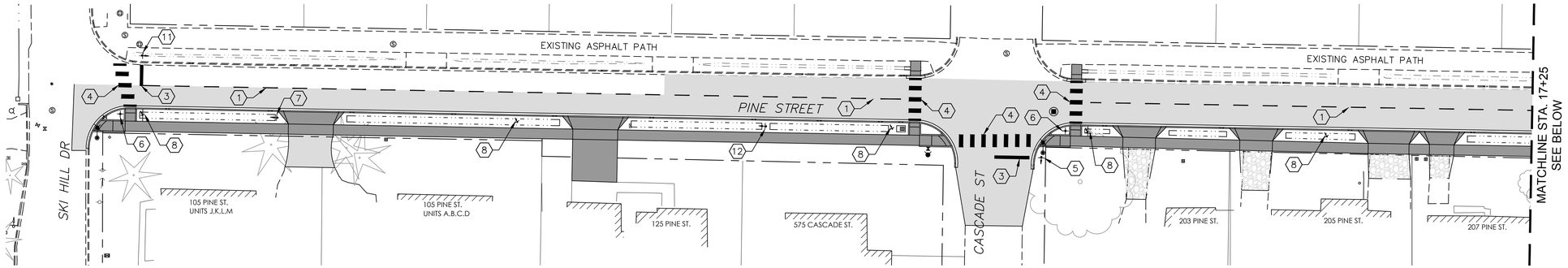

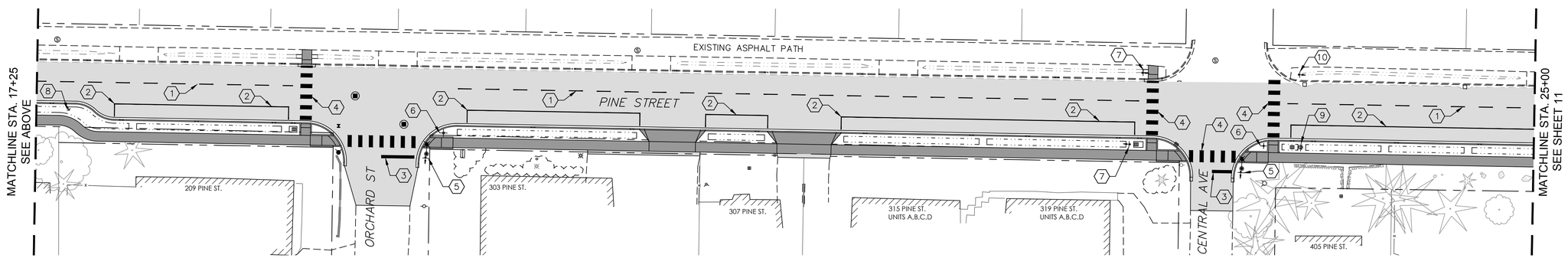

CONSTRUCTION NOTES

1. 4" WIDE YELLOW PAINTED CENTERLINE
2. 4" WIDE WHITE PAINTED EDGE LINE.
3. 18" WIDE PAINTED STOP LINE.
4. PAINTED CROSSWALK PER WSDOT STANDARD PLAN M-15.10-01.
5. STOP SIGN R1-1 (30"x30") ON TYPE ST-4 SIGN SUPPORT.
6. STREET NAME SIGNS ON TYPE ST-4 SIGN SUPPORT.
7. SPEED LIMIT 25 SIGN R2-1 (24"x30") ON TYPE ST-4 SIGN SUPPORT.
8. NO PARKING SIGN R7-1 (12"x18") ON TYPE ST-4 SIGN SUPPORT.
9. SCHOOL ZONE FLASHING BEACON SIGN ASSEMBLY PER DETAIL 1 ON SHEET XX. SIGN ASSEMBLY SHALL BE A/C POWERED PER SHEET EXX. MOUNT SIGN, BEACONS AND TERMINAL CABINET ON FB SIGNAL STANDARD PER STANDARD PLAN J-21.10-04 WITH MOUNTING REQUIREMENTS SIMILAR TO STANDARD PLAN J-21.16-01.
10. END SCHOOL ZONE S5-2 (24"x30") ON TYPE ST-4 SIGN SUPPORT.
11. NEW LOCATION FOR RELOCATED STOP SIGN.
12. NEW LOCATION FOR RELOCATED "CAUTION PEDESTRIAN TRAFFIC" SIGN. REINSTALL SIGN BY REUSING EXISTING POST.

GRAPHIC SCALE

30 0 15 30 60

(IN FEET)
1 inch = 30 ft.

REV	DATE	REVISION

TD&H Engineering
509.622.2888 • tdhengineering.com
303 EAST 2ND AVE. • SPOKANE, WASHINGTON 99202

DRAWN BY:	JR/DW
DESIGNED BY:	DNW
QUALITY CHECK:	DNW
DATE:	11/08/18
JOB NO.	S17-123
FIELDBOOK	

PINE STREET PHASE 1 - SKI HILL DR. TO TITUS RD.
LEAVENWORTH, WASHINGTON

PINE STREET SIGNING AND STRIPING PLAN STA. 10+00 TO STA. 25+00

MEETING EXHIBITS

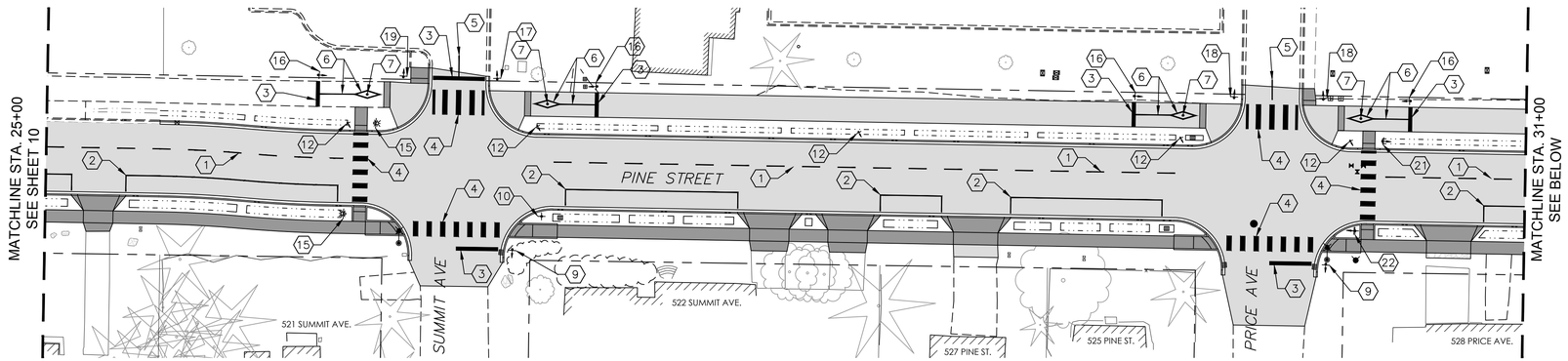

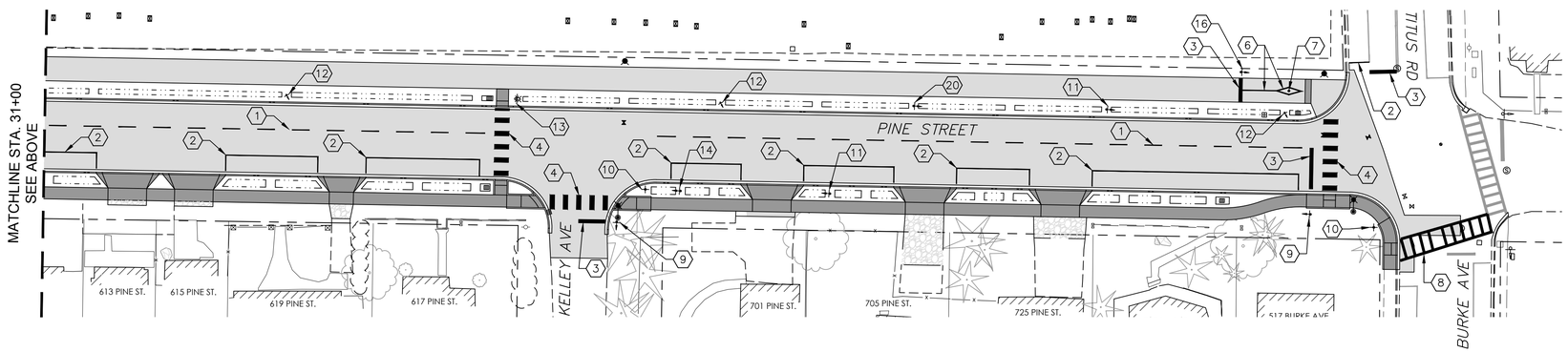

CONSTRUCTION NOTES

1. 4" WIDE YELLOW PAINTED CENTERLINE.
2. 4" WIDE WHITE PAINTED EDGE LINE.
3. 18" WIDE PAINTED STOP LINE.
4. PAINTED CROSSWALK PER WSDOT STANDARD PLAN M-15.10-01.
5. 4" WIDE WHITE PAINTED SOLID LANE LINE.
6. 4" WIDE YELLOW PAINTED SOLID LANE LINE. SEE WSDOT STANDARD PLAN M-9.60-00 FOR SHARED-USE PATH MARKING LAYOUT.
7. BOLLARD TYPE 1 PER WSDOT STANDARD PLAN H-60.10-01. SEE WSDOT STANDARD PLAN M-9.60-00 FOR BOLLARD LAYOUT.
8. PAINTED CROSSWALK TO MATCH EXISTING.
9. STOP SIGN R1-1 (30"x30") ON TYPE ST-4 SIGN SUPPORT.
10. STREET NAME SIGNS ON TYPE ST-4 SIGN SUPPORT.
11. SPEED LIMIT 25 SIGN R2-1 (24"x30") ON TYPE ST-4 SIGN SUPPORT.
12. NO PARKING SIGN R7-1 (12"x18") ON TYPE ST-4 SIGN SUPPORT.
13. SCHOOL ZONE FLASHING BEACON SIGN ASSEMBLY PER DETAIL 1 ON SHEET XX. SIGN ASSEMBLY SHALL BE A/C POWERED PER SHEET EXX. MOUNT SIGN, BEACONS AND TERMINAL CABINET ON FB SIGNAL STANDARD PER STANDARD PLAN J-21.10-04 WITH MOUNTING REQUIREMENTS SIMILAR TO STANDARD PLAN J-21.16-01.
14. END SCHOOL ZONE S5-2 (24"x30") ON TYPE ST-4 SIGN SUPPORT.
15. SCHOOL CROSSING ASSEMBLY WITH RECTANGULAR RAPID FLASHING BEACONS. SIGN POST AND BEACONS PROVIDED BY CITY OF LEAVENWORTH. CONTRACTOR SHALL CONSTRUCT FOUNDATION, INSTALL POST, REPLACE EXISTING PEDESTRIAN CROSSING SIGNS WITH EXISTING SCHOOL CROSSING SIGNS S1-1 AND W16-7P, ADD NEW SCHOOL CROSSING SIGNS S1-1 AND W16-7P TO REVERSE, AND CONVERT POWER SOURCE FROM SOLAR TO A/C POWERED PER SHEET EXX. FOUNDATION PER STANDARD PLAN J-21.10-04.
16. BICYCLE/PEDESTRIAN W11-15 (30"x30"), NO MOTOR VEHICLES R5-3 (24"x24"), TRAIL X-ING W11-15P (24"x18") ON REVERSE, ON TYPE ST-4 SIGN SUPPORT.
17. STOP SIGN R1-1 (30"x30"), DO NOT ENTER R5-1 (30"x30") ON REVERSE, ON TYPE ST-4 SIGN SUPPORT.
18. DO NOT ENTER R5-1 (30"x30"), MANDATORY MOVEMENT LANE CONTROL R3-5a (30"x36") ON REVERSE, ON TYPE ST-4 SIGN SUPPORT.
19. NEW LOCATION FOR RELOCATED STOP AND DO NOT ENTER SIGN.
20. NEW LOCATION FOR RELOCATED "CAUTION PEDESTRIAN TRAFFIC" SIGN. REINSTALL SIGN BY REUSING EXISTING POST.
21. NEW LOCATION FOR RELOCATED SCHOOL CROSSING ASSEMBLY SIGN. REINSTALL SIGN BY REUSING EXISTING POST.
22. NEW LOCATION FOR RELOCATED SCHOOL CROSSING ASSEMBLY SIGN, ADD STREET NAME SIGNS, ON NEW TYPE ST-4 SIGN SUPPORT.

GRAPHIC SCALE
30 0 15 30 60
(IN FEET)
1 inch = 30 ft.

REV	DATE	REVISION

TD&H Engineering
509.622.2888 • tdhengineering.com
303 EAST 2ND AVE. • SPOKANE, WASHINGTON 99202

DRAWN BY:	JR/DW
DESIGNED BY:	DNW
QUALITY CHECK:	DNW
DATE:	11/08/18
JOB NO.	S17-123
FIELDBOOK	

PINE STREET PHASE 1 - SKI HILL DR. TO TITUS RD.
LEAVENWORTH, WASHINGTON

PINE STREET SIGNING AND STRIPING PLAN STA. 25+00 TO STA. 36+79

MEETING EXHIBITS

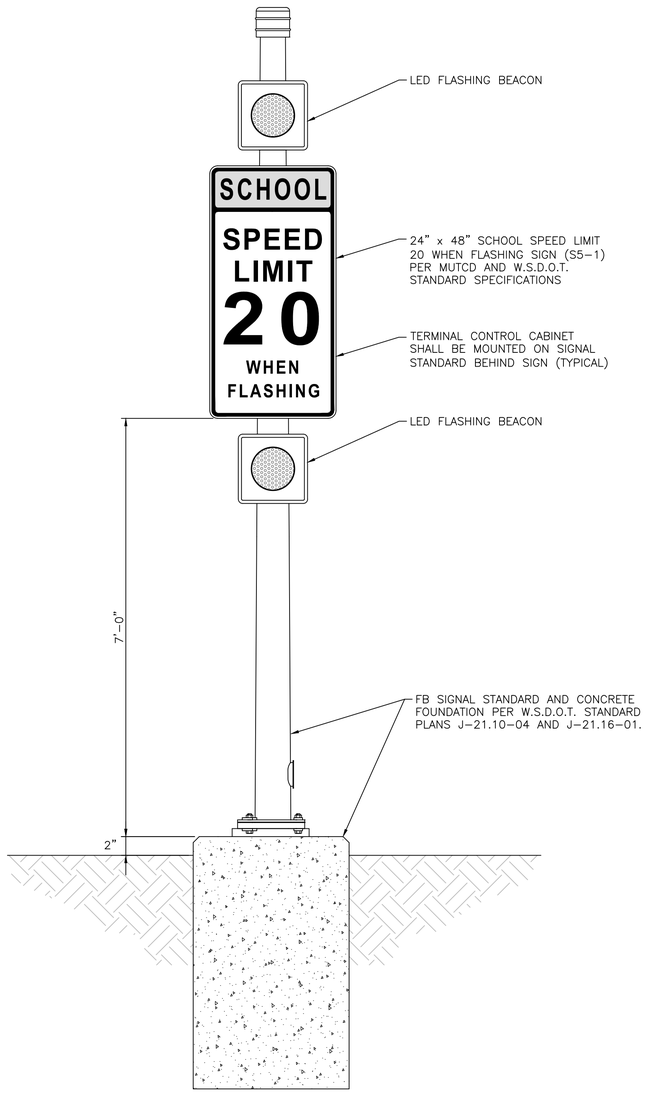

SIGN ASSEMBLY DETAIL (1)

NOT TO SCALE

REV	DATE	REVISION

TD&H Engineering
509.622.2888 • tdhengineering.com
303 EAST 2ND AVE. • SPOKANE, WASHINGTON 99202

DRAWN BY:	JR/DW
DESIGNED BY:	DNW
QUALITY CHECK:	DNW
DATE:	11/08/18
JOB NO.	S17-123
FIELDBOOK	

PINE STREET PHASE 1 - SKI HILL DR. TO TITUS RD.
LEAVENWORTH, WASHINGTON

PINE STREET SIGNING DETAILS